Sep.1.2024 Copyright 2024 HIROSE ELECTRIC CO., LTD. All Rights Reserved.
In case of consideration for using Automotive equipment / device which demand high reliability, kindly contact our sales window correspondents.

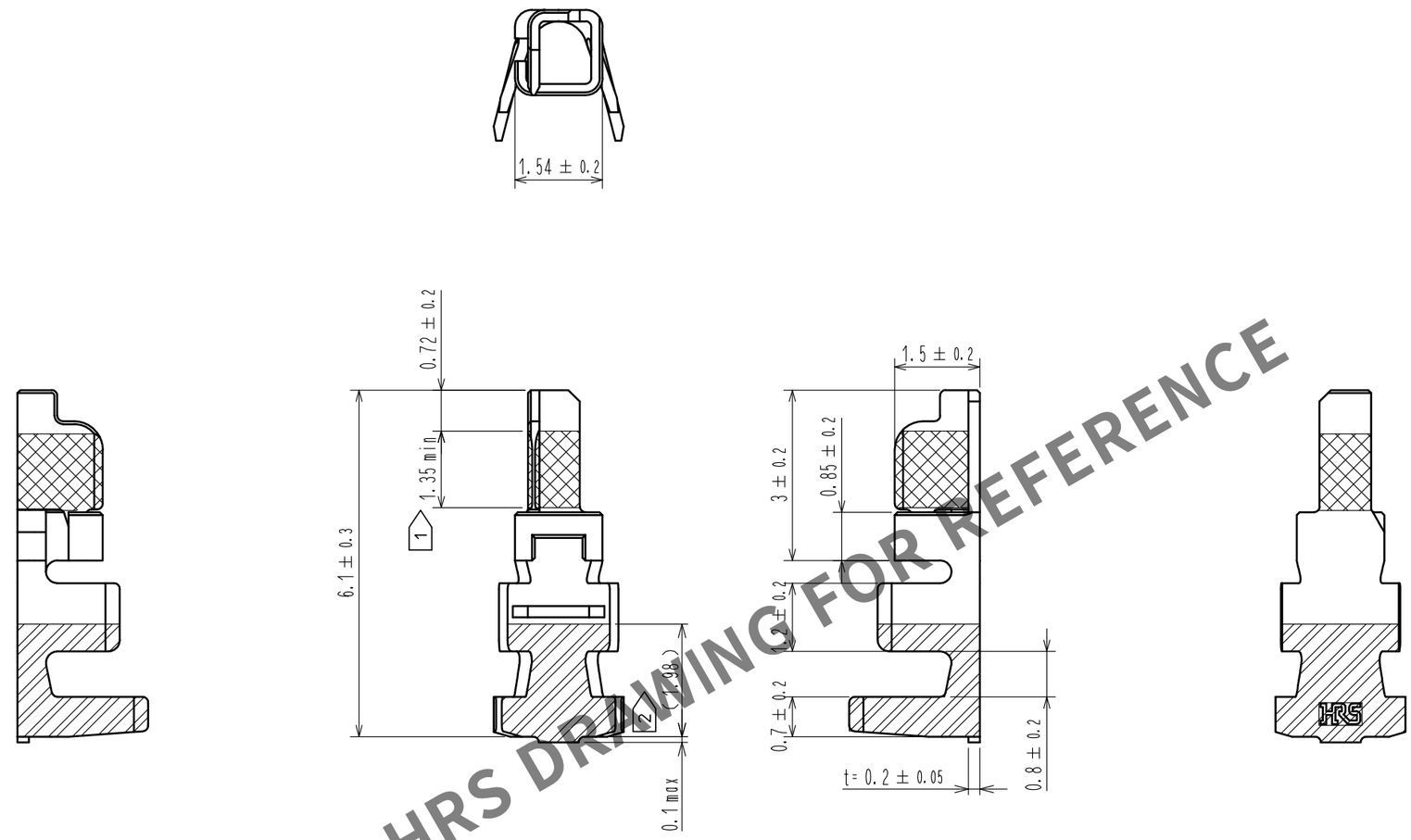

HRS DRAWING FOR REFERENCE

NOTE. 1 GOLD PLATING AREA POSITION.
2 TIN PLATING AREA POSITION.
3 1PACK : 100 CONTACTS.
4 UL(FILE NO. E52653),
C-UL(FILE NO. E52653) APPROVED PRODUCT.

NO.	MATERIAL	FINISH , REMARKS	NO.	MATERIAL	FINISH , REMARKS
			1	PHOSPHOR BRONZE	1 CONTACT AREA : GOLD PLATING 0.2 μm MIN 2 BARREL AREA : TIN PLATING 1μm MIN OTHERS : NICKEL PLATING 0.5 μm MIN

UNITS	SCALE		COUNT	DESCRIPTION OF REVISIONS	DESIGNED	CHECKED	DATE
mm	5 : 1	0					

HRS HIROSE ELECTRIC CO., LTD.

APPROVED	: HS. OKAWA	16. 05. 18	DRAWING NO.	EDC-339703-00-00
CHECKED	: TS. FUKUSHIMA	16. 05. 18	PART NO.	DF59-22PCA
DESIGNED	: TS. KUMAZAWA	16. 05. 18	CODE NO.	CL667-0022-0-00
DRAWN	: TS. KUMAZAWA	16. 05. 18		0 1/1

FORM HC0011-5-7